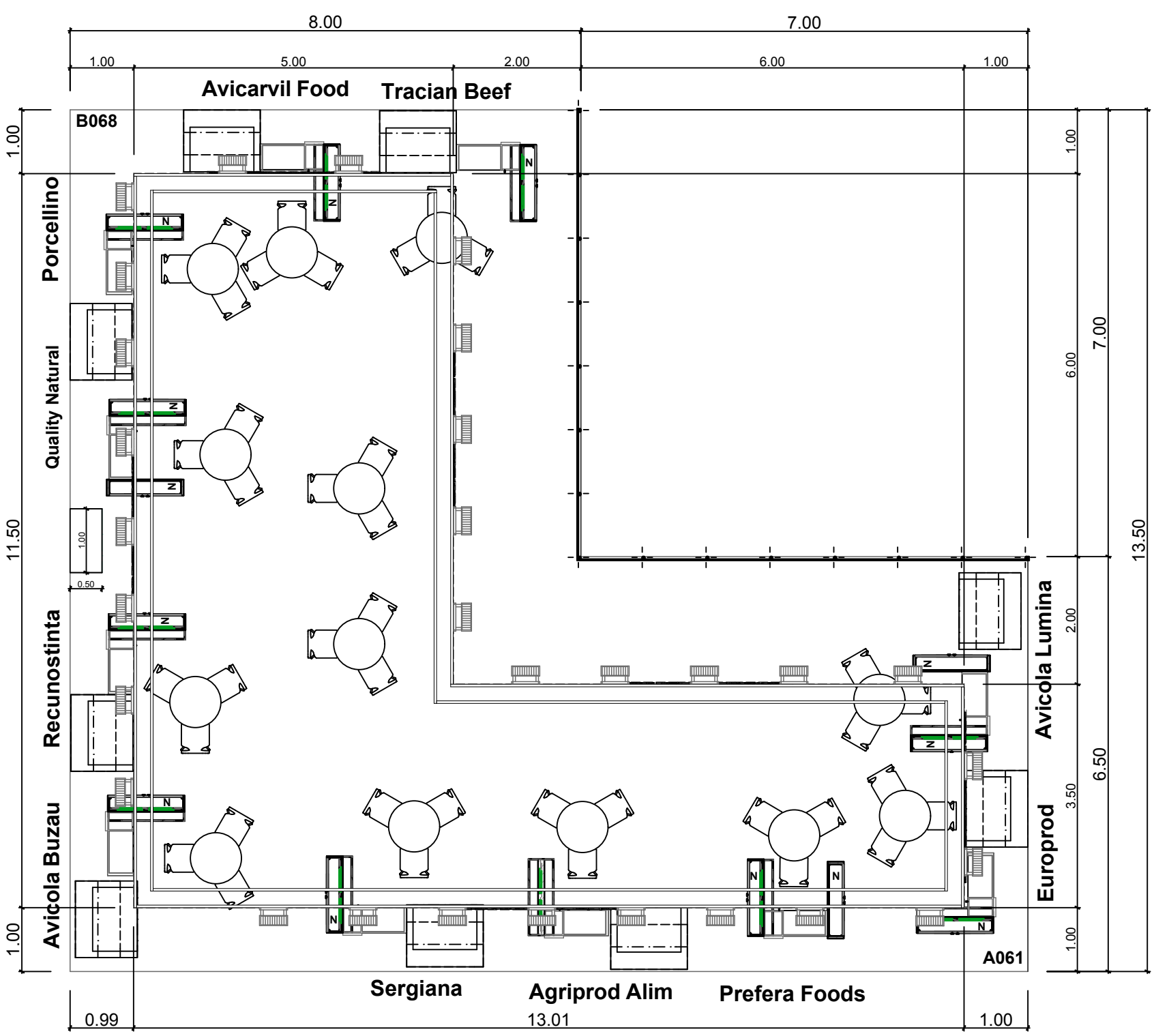

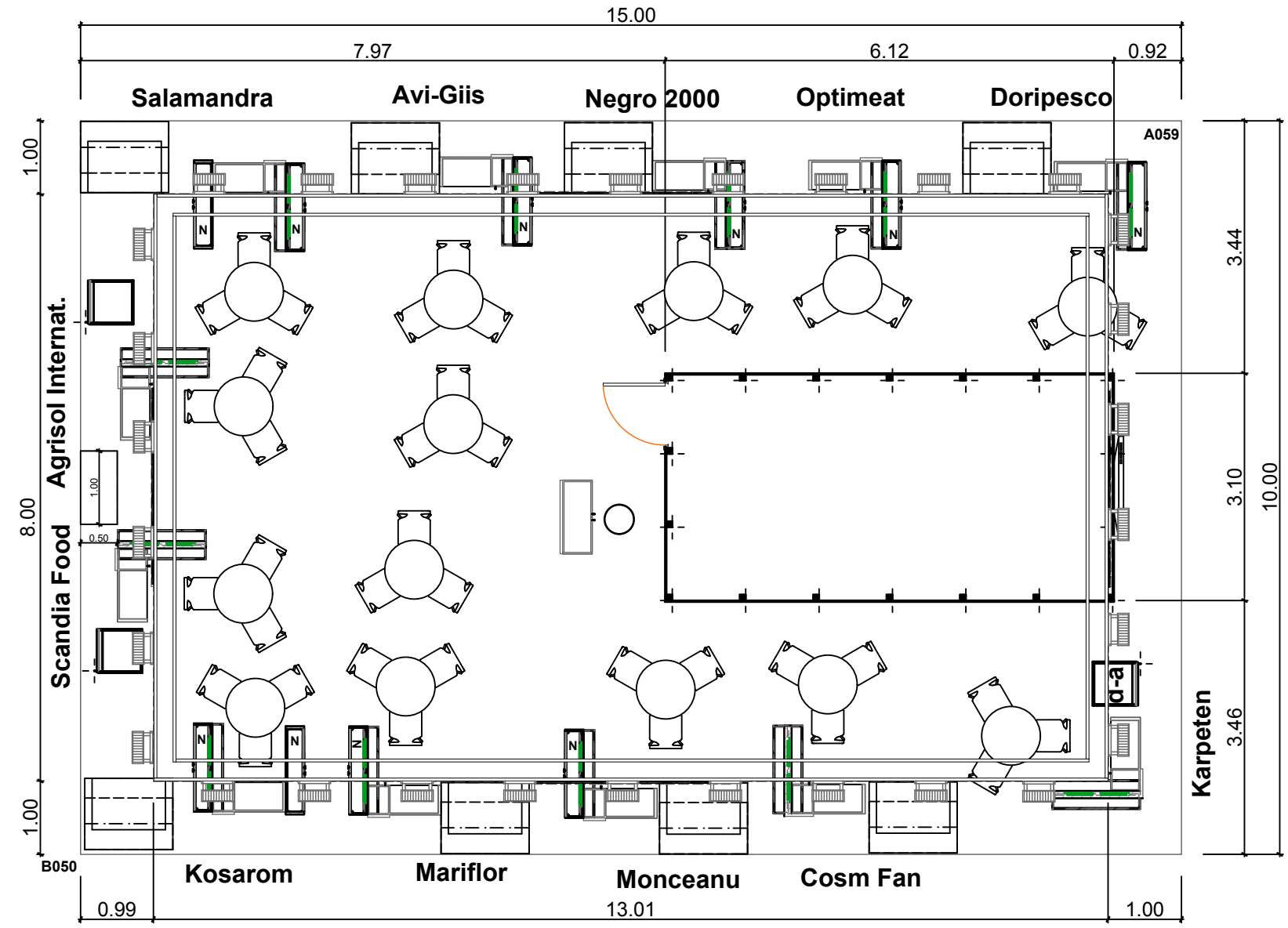

S-01

Anuga 2017 Koeln - Romanian Pavilion - Meat (150 mp + 153 mp)

Halle 9.1 Stand B050+A059 & A061+B068 - Plan (8)